Document 24-2766
Book 2024 Page 2766 Type CORNR Pages 1
Date 7/08/2024 Time 12:16 PM
Rec Amt $7.00

NAOMI ELLIS, RECORDER
MARION COUNTY IOWA

GARDEN & ASSOC. P.O. Box 451, Oskaloosa, Iowa 52577-0451 Phone: (641)672-2526

UNITED STATES PUBLIC LAND SURVEY CORNER CERTIFICATE OF

LAND SURVEY MONUMENTS SITUATED IN SECTION 13, TOWNSHIP 76, RANGE 21,

OF THE FIFTH PRINCIPAL MERIDIAN, MARION COUNTY, IOWA.

PREVIOUSLY RECORDED IN BOOK 2014 ON PAGE 1907 IN COUNTY RECORDER'S OFFICE.

MONUMENT DESCRIPTION AND REMARKS:

SEE BELOW

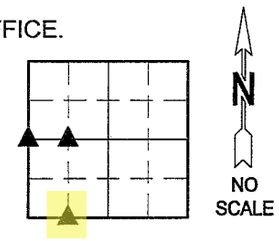

WEST 1/4 COR

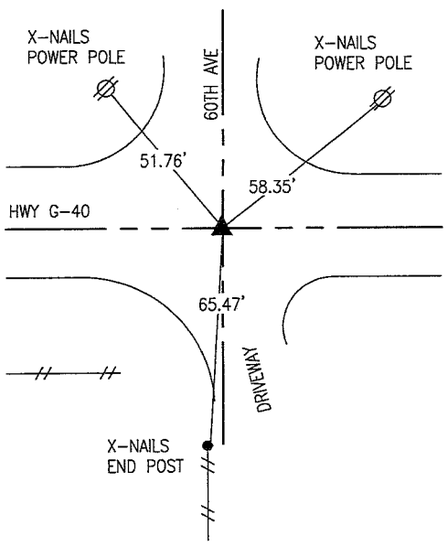

MAY 2014
LS 5594 FOUND A PK NAIL FROM PREVIOUS CORNER CERTIFICATE AND RETIED CORNER AS SHOWN ON THE CORNER CERTIFICATE RECORDED IN BOOK 201 ON PAGE 1907.

MAY 2024
PK NAIL WAS OBLITERATED BY PAVING PATCH WORK. SET GIN SPIKE USING EXISTING TIES AND DIMENSIONS OF RECORD.

NE COR NW-SW

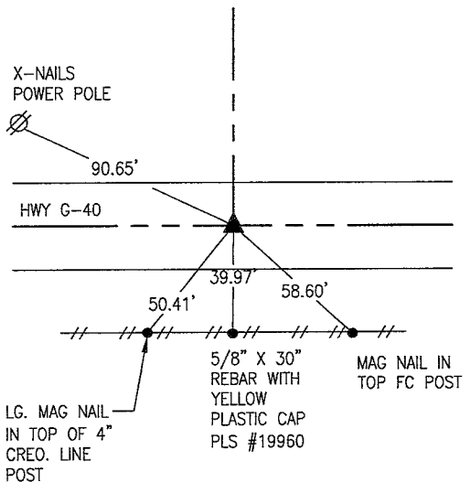

MAY 2024
SET GIN SPIKE AT THE MIDPOINT OF A LINE CONNECTING THE CENTER AND WEST 1/4 CORNER.

SE COR SW-SW

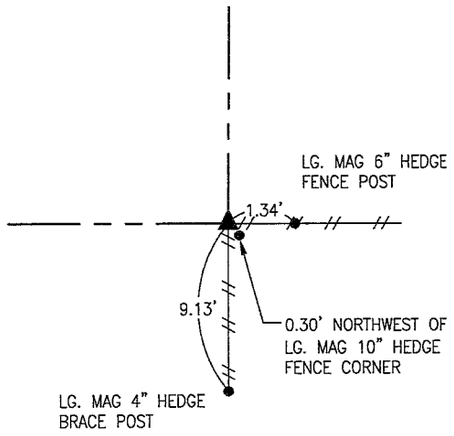

MAY 2024
SET 5/8" REBAR WITH CAP #19960 AT FENCE CORNER. THE DISTANCE EAST TO THE SOUTH 1/4 CORNER (5/8" RBR #3754) CHECKED WITHIN REASON (1317.14')

I hereby certify that this land surveying document was prepared and the related survey work was performed by me or under my direct personal supervision and that I am a duly licensed Professional Land Surveyor under the laws of the State of Iowa.

PROFESSIONAL LAND SURVEYOR
BOBBY J. MADDALENO
19960
IOWA

Bobby J Maddaleno 7-3-24
Date
Bobby J. Maddaleno, P.L.S.
License number: 19960
My license renewal date is December 31, 2025

LIST CORNERS TO BE INDEXED

CORNERS	SECTION	TOWNSHIP	RANGE
WEST 1/4 COR	13	76	21
NE COR NW-SW	13	76	21
SE COR SW-SW	13	76	21

Pd #78 CK - Ret Garden & Assoc Env.

1-1